SERIES R45

Dynapar™ brand

Bearingless Ring Kit

Key Features

- **56C-face Ring Kit Motor Mounting**
- **Dependable Gear Tooth & Pickup Design**
- **Field-Replaceable Readhead for Easy Service**
- **Thin 5/8" Profile Saves Valuable Space**

SPECIFICATIONS

STANDARD OPERATING CHARACTERISTICS

Code: Incremental
Resolution: 60 PPR (pulses/revolution), optional 120 PPR with X2 output
Format: Single channel unidirectional (A), or two channel quadrature (AB) outputs
Quadrature Phasing: 90° ± 45° electrical
Symmetry: 180° ± 36° electrical

ELECTRICAL

Input Power: (not including output loads)
Single ended 4.5 min. to 16.5 VDC max. at 50 mA max.;
Open collector and differential line driver: 4.5 min. to 26 VDC max. at 75 mA max.
Outputs:
Single ended with 2 kΩ pullup: 16.5 VDC max., 20 mA sink at 0.5 V max.;
Open Collector: 30 VDC max., 40 mA sink max.;
7272 Differential Line Driver: 40 mA sink or source
Frequency Response: 10 kHz min.
Electrical Protection: Overvoltage and reverse voltage to 30 VDC; output short circuit protected to Common or other outputs, to +V (differential line driver only)
Noise Immunity: Tested to EN50082-2 (Heavy Industrial) for Electro Static Discharge, Radio Frequency Interference, Electrical Fast Transients, Conducted and Magnetic Interference
Terminations:
Wire leads: 7" long min., 18 AWG;
Screw terminals: accept 22 to 14 AWG solid or stranded wires

ELECTRICAL CONNECTIONS

Function (If Used)	Wire Color	Terminal
Signal X2	ORG	1
Signal B	BRN	2
Signal A	YEL	3
+V in	RED	4
Common	BLK	5
Signal $\overline{A}$	WHT	6
Signal $\overline{B}$	GRN	7
Signal $\overline{X2}$	BLU	8

MECHANICAL

Motor frame sizes: 56C, 143TC, 145TC, 182C and 184C
Motor shaft/hub sizes: 5/8", 7/8" nominal
Housing: Cast Aluminum, chromate finish
Gear: 1010 Steel
Moment of Inertia: 0.0035 in-lb-sec^2
Shaft Speed: 5,000 RPM max.
Readhead to gear gap: 0.020" nominal, 0.030 max.
Allowable Endplay: ±0.060

ENVIRONMENTAL

Operating Temperature: –40 to +85 °C
Storage Temperature: –40 to +90 °C
Shock: 20 G's for 11 milliseconds duration
Vibration: 5 to 2000 Hz at 2.5 G's
Humidity: to 98% without condensation

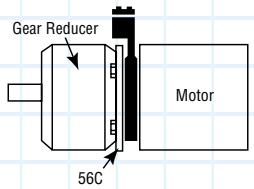

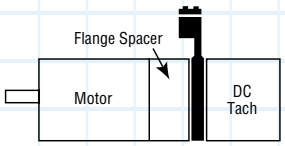

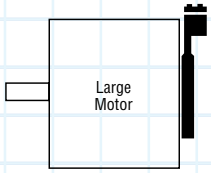

Ordering Information

To order, complete the model number with code numbers from the table below:

Code 1: Model	Code 2: PPR	Code 3: Gear, Bore	Code 4: Output	Code 5: Electrical	Code 6: Termination
R45	□□□□	□	□	□	□
Ordering Information					
R45 Motor Mount Ring, for NEMA 4-1/2" C-Face Motors **R00** No Ring (gear or readhead only)	**0060**	**0** no gear, readhead only **1** 5/8" bore (56C) **2** 7/8" bore (143TC, 145TC, 182C, 184C)	**0** no readhead, gear only **1** single channel (A), unidirectional **2** dual channel (AB), bidirectional **3** dual channel (AB), bidirectional with unidirectional (X2) speed output	**0** no readhead, gear only Available when Code 4 is 1, 2 or 3: **1** 5-15V in, 5-15V single ended out **2** 5-26V in, 5-26V differential line driver out **3** 5-26V in, 5-26V open collector out	**0** no readhead, gear only Available when Code 4 is 1, 2 or 3: **1** wire leads **2** screw terminals **A** Same as 1, with protective cover **B** Same as 2, wtih protective cover
112122-0001	R45 protective shaft cover accessory				

Example Model number: 5/8" bore, gear only = R00 0060 1000

DIMENSIONS

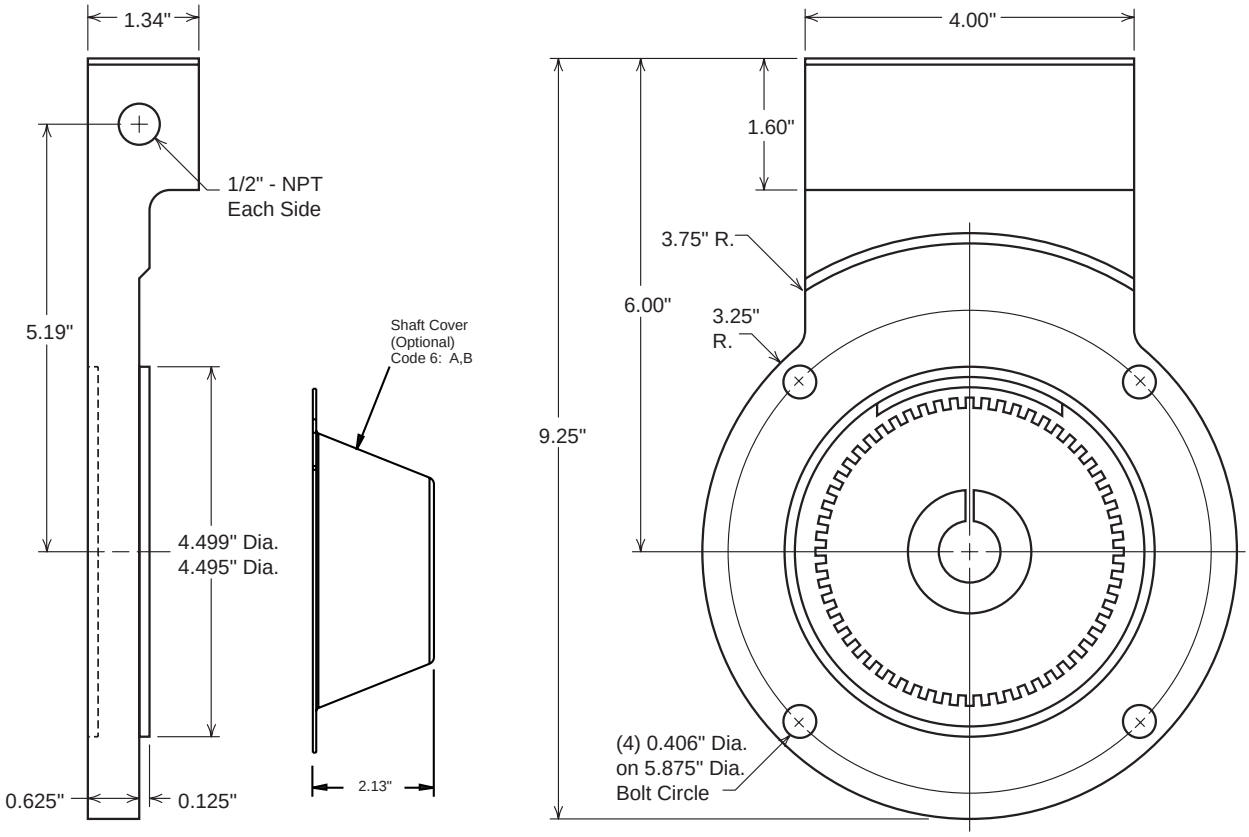

DYNAPAR™
INNOVATION - CUSTOMIZATION - DELIVERY

Worldwide Brands: NorthStar™ • Acuro™ • Dynapar™ • Hengstler™ • Harowe™
Headquarters: 1675 Delany Road • Gurnee,,IL 60031-1282 • USA • Phone: 1.847.662.2666 • Fax: 1.847.662.6633

Satellite Locations:
- **North America:** North Carolina, South Carolina, Connecticut, Massachusetts, New York, Canada, British Virgin Islands
- **West Indies:** St. Kitts • **Europe:** United Kingdom, Italy, France, Germany, Spain, Slovakia
- **South America:** Brazil • **Asia:** China, Japan, Korea, Singapore

Customer Service:
Tel.: +1.800.873.8731
Fax: +1.847.662.4150
custserv@dynapar.com

Technical Support
Tel.: +1.800.234.8731
Fax: +1.847.782.5277
northstar.techsupport@dynapar.com

701971-0002 Rev. - ©2010 DYNAPAR